The Indefinite Admittance Matrix

The indefinite admittance matrix, designated YF for short, is a circuit analysis technique[i,ii,iii] which lends itself well to any topology. Once the nodal equations of the circuit are written, basic inherent properties of the YF allow any N × N admittance matrix to be collapsed to a two-port admittance matrix. From this point, standard two-port relationships in either Y- or S- parameters can be utilized to calculate input, output impedance, voltage or power gain, stability, etc.

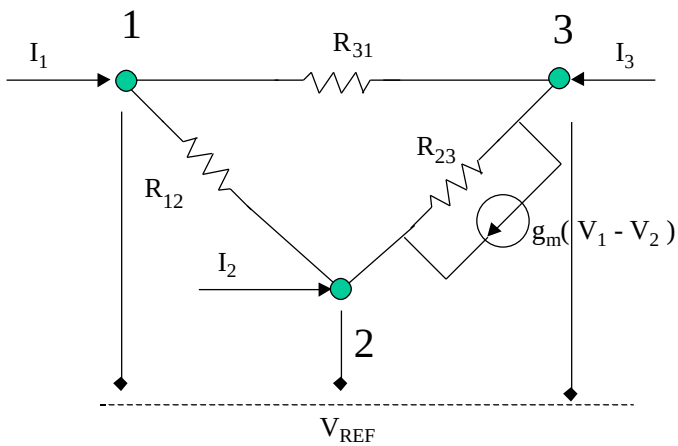

Figure 1

A fundamental property of the YF technique is that any individual row or column of the YF matrix sums to zero. This is due to Kirchoff's current law at each node. One minor exception to this rule, however, is in the presence of independent current sources connecting specific nodes. In those cases the summation of currents will not equal zero.

Figure 1 best illustrates the application of the YF method. Standard nodal equations at each of the individual nodes are written; these are given in [1]. Rewriting [1] in standard matrix form gives [2] which, adopting standard admittance notation, can be equivalently expressed as in [3].

$$\begin{aligned} I_1 &= (\eta_{1,2} + \eta_{3,1})V_1 - \eta_{1,2}V_2 - \eta_{3,1}V_3 \\ I_2 &= -(\eta_{1,2} + g_m)V_1 + (\eta_{1,2} + \eta_{2,3} + g_m)V_2 - \eta_{2,3}V_3 \\ I_3 &= -(\eta_{3,1} - g_m)V_1 - (\eta_{2,3} + g_m)V_2 + (\eta_{3,1} + \eta_{2,3})V_3 \end{aligned} \qquad [1]$$

$$\begin{bmatrix} I_1 \\ I_2 \\ I_3 \end{bmatrix} = \begin{bmatrix} \eta_{1,2} + \eta_{3,1} & -\eta_{2,1} & -\eta_{3,1} \\ -(\eta_{1,2} + g_m) & (\eta_{1,2} + \eta_{2,3} + g_m) & -\eta_{2,3} \\ -(\eta_{3,1} - g_m) & -(\eta_{2,3} + g_m) & (\eta_{3,1} + \eta_{2,3}) \end{bmatrix} \begin{bmatrix} V_1 \\ V_2 \\ V_3 \end{bmatrix} \qquad [2]$$

$$\begin{bmatrix} I_1 \\ I_2 \\ I_3 \end{bmatrix} = \begin{bmatrix} Y_{1,1} & Y_{1,2} & Y_{1,3} \\ Y_{2,1} & Y_{2,2} & Y_{2,3} \\ Y_{3,1} & Y_{3,2} & Y_{3,3} \end{bmatrix} \begin{bmatrix} V_1 \\ V_2 \\ V_3 \end{bmatrix} \qquad [3]$$

where η is admittance and

$Y_{1,1} = \eta_{1,2} + \eta_{3,1}$	$Y_{1,2} = -\eta_{1,2}$	$Y_{1,3} = -\eta_{3,1}$
$Y_{2,1} = -(\eta_{1,2} + g_m)$	$Y_{2,2} = \eta_{1,2} + \eta_{2,3} + g_m$	$Y_{2,3} = -\eta_{2,3}$
$Y_{3,1} = -(\eta_{3,1} - g_m)$	$Y_{3,2} = -(\eta_{2,3} + g_m)$	$Y_{3,3} = \eta_{3,1} + \eta_{2,3}$

In actual use the YF matrix is converted first, through a series of matrix reduction methods, from an N × N matrix to a 3 × 3 matrix composed of a) input, b) output, and c) reference nodes. At this point in time any one of the three nodes can be considered the reference. Once the reference node is identified and the reduction from the 3 × 3 to a final 2 × 2 matrix completed, the indefinite matrix becomes "definite." When the reference is identified, all voltages for the remaining two ports are referenced to this reference node with none of the remaining nodes "floating."

If only 4 of the 9 elements in a 3 × 3 YF matrix are known, it is possible to complete all entries of the matrix using the zero-sum property that each column and row must obey. The reverse operation on the definite 2 × 2 matrix in this manner allows the reference to be shifted to a different node, i.e. common-base versus a common-emitter configuration. Once again if independent sources are present, the zero-row, zero-column properties do not hold. If the circuit network is passive, the YF matrix is also symmetrical.

The 3 × 3 YF matrix for the transistor is shown in [4] and Figure 2. It is a simple algebraic matter to absorb the reference terminal (base, emitter, or collector) as the reference culminating in two-port Y-parameters for the respective transistor topology.

$$\begin{bmatrix} I_b \\ I_c \\ I_e \end{bmatrix} = \begin{bmatrix} y_{bb} & y_{bc} & y_{be} \\ y_{cb} & y_{cc} & y_{ce} \\ y_{eb} & y_{ec} & y_{ee} \end{bmatrix} \begin{bmatrix} V_B \\ V_C \\ V_E \end{bmatrix} \quad [4]$$

$$YF = \begin{bmatrix} - & - & - \\ - & y_{cc} & y_{ce} \\ - & y_{ec} & y_{ee} \end{bmatrix} \quad [5]$$

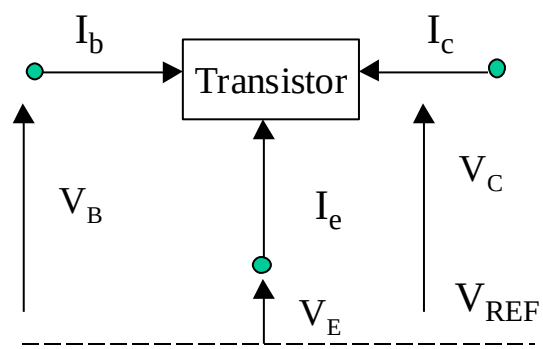

Figure 2

Voltages & Currents for Transistor

When VE is set to zero, for example, the indefinite matrix in [4] and Figure 2 describes the common-emitter configuration. The YF in [5] describes a common-base configuration. To complete the matrix the zero-sum property of the matrix can be used, giving [6].

$$YF = \begin{bmatrix} y_{ob} + y_{fb} + y_{rb} + y_{ib} & -(y_{ob} + y_{rb}) & -(y_{fb} + y_{ib}) \\ -(y_{ob} + y_{fb}) & y_{ob} & y_{fb} \\ -(y_{rb} + y_{ib}) & y_{rb} & y_{ib} \end{bmatrix} \quad [6]$$

The steps to determine the indefinite matrix for the overall network are the following:

1. Label each node
2. Break the circuit up into component networks – one network for the passive elements and separate networks for each active element
3. Determine the YF for each component network
4. Add the individual YFs to give the complete indefinite matrix.

Each of the matrices for the component networks, as well as the overall matrix, have dimensions of N × N, where N is the number of nodes in the circuit. The row and column that correspond to an unconnected node of the component network are set to zero. For a circuit fragment that includes a transistor, the letters B, E, and C are placed against the respective nodes to which the base, emitter, and collector are connected. These three nodes are treated as if they were the 3 × 3 indefinite matrix that represents the transistor.

Specifically, for a common-emitter transistor connected with (B, E, C) to nodes (1, 2, 4) respectively, the following sub-matrix, and associated row-column numbers, applies.

$$YF = \begin{bmatrix} & 1,B & 2,E & 3,C \\ 1,B & y_{bb} = y_{ie} & & y_{bc} = y_{re} \\ 2,E & & & \\ 3,C & y_{cb} = y_{fe} & & y_{cc} = y_{oe} \end{bmatrix} \quad [7]$$

Application of the zero-sum property for rows and columns

completes the matrix in [7] as shown in [8]. The final result is obtained by transferring the elements to their proper position in the N × N matrix for the complete network. The YF matrix for the passive portion of the circuit can be written by inspection, following the following rules:

1. Each diagonal element y_{rr} equals the sum of all admittances connected to node r.
2. An off-diagonal element y_{rs} equals minus the admittance connected between node r and node s.
3. Elements in rows and columns that correspond to unconnected nodes are zero.

$$YF = \begin{bmatrix} & 1,B & 2,E & 3,C \\ 1,B & y_{ie} & -\left(y_{ie}+y_{re}\right) & y_{re} \\ 2,E & -\left(y_{ie}+y_{fe}\right) & \left(y_{ie}+y_{fe}+y_{re}+y_{oe}\right) & -\left(y_{re}+y_{oe}\right) \\ 3,C & y_{fe} & -\left(y_{fe}+y_{oe}\right) & y_{oe} \end{bmatrix} \quad [8]$$

In the process of node reduction to a final 2 × 2 admittance matrix, the nodes which are suppressed are no longer available for connection to external components or other sources. The corresponding current at each of these nodes, I_j, must be zero. For example, if node 2 is being suppressed for a circuit with a total of 5 nodes, the current entering node 2 is identically zero, giving [9].

$$0 = y_{2,1}V_1 + y_{2,2}V_2 + y_{2,3}V_3 + y_{2,4}V_4 + y_{2,5}V_5 \quad [9]$$

The expression in [9] is then used to solve for V_2, and this expression added back to the original matrix for all entries of V_2, thus suppressing any reference to V_2.

$$V_2 = -\left(\frac{y_{2,1}}{y_{2,2}}\right)V_1 - \left(\frac{y_{2,3}}{y_{2,2}}\right)V_3 - \left(\frac{y_{2,4}}{y_{2,2}}\right)V_4 - \left(\frac{y_{2,5}}{y_{2,2}}\right)V_5 \quad [10]$$

For an example 5 × 5 circuit in which node 2 is removed, the expression in [10] is substituted for all appearances of V_2 in the nodal equation, giving for the first row of the new, reduced matrix that in [11]. After consolidating and simplifying terms, [11] takes on the form of [12].

$$y_{1,1}V_1 + y_{1,2}\left[-\frac{y_{2,1}}{y_{2,2}}V_1 - \frac{y_{2,3}}{y_{2,2}}V_3 - \frac{y_{2,4}}{y_{2,2}}V_4 - \frac{y_{2,5}}{y_{2,2}}V_5\right] + y_{1,3}V_3 + y_{1,4}V_4 + y_{1,5}V_5 \quad [11]$$

$$\left(y_{1,2} - \frac{y_{2,1}}{y_{2,2}}y_{1,2}\right)V_1 + \left(y_{1,3} - \frac{y_{1,2}}{y_{2,2}}y_{2,3}\right)V_3 + \left(y_{1,4} - \frac{y_{1,2}}{y_{2,2}}y_{2,4}\right)V_4 + \left(y_{1,5} - \frac{y_{1,2}}{y_{2,2}}y_{2,5}\right)V_5 \quad [12]$$

The completed YF after the suppression of node 2 is shown in [13]. A further suppression of nodes is then performed, driving toward having a defined reference and input and output nodes. At this point, common two-port relationships are then applied.

$$
\begin{aligned}
&\left(y_{1,1}-\frac{y_{2,1}}{y_{2,2}}y_{1,2}\right)V_1+\left(y_{1,3}-\frac{y_{1,2}}{y_{2,2}}y_{2,3}\right)V_3+\left(y_{1,4}-\frac{y_{1,2}}{y_{2,2}}y_{2,4}\right)V_4+\left(y_{1,5}-\frac{y_{1,2}}{y_{2,2}}y_{2,5}\right)V_5\\
&\left(y_{3,1}-\frac{y_{3,2}}{y_{2,2}}y_{2,1}\right)V_1+\left(y_{3,3}-\frac{y_{3,2}}{y_{2,2}}y_{2,3}\right)V_3+\left(y_{3,4}-\frac{y_{3,2}}{y_{2,2}}y_{2,4}\right)V_4+\left(y_{3,5}-\frac{y_{3,2}}{y_{2,2}}y_{2,5}\right)V_5\\
&\left(y_{4,1}-\frac{y_{4,2}}{y_{2,2}}y_{2,1}\right)V_1+\left(y_{4,3}-\frac{y_{4,2}}{y_{2,2}}y_{2,3}\right)V_3+\left(y_{4,4}-\frac{y_{4,2}}{y_{2,2}}y_{2,4}\right)V_4+\left(y_{4,5}-\frac{y_{4,2}}{y_{2,2}}y_{2,5}\right)V_5\\
&\left(y_{5,1}-\frac{y_{5,2}}{y_{2,2}}y_{2,1}\right)V_1+\left(y_{5,3}-\frac{y_{5,2}}{y_{2,2}}y_{2,3}\right)V_3+\left(y_{5,4}-\frac{y_{5,2}}{y_{2,2}}y_{2,4}\right)V_4+\left(y_{5,5}-\frac{y_{5,2}}{y_{2,2}}y_{2,5}\right)V_5
\end{aligned}
\qquad [13]
$$

Reduced Admittance Matrix After Suppression of Node 2

Using the completed two-port admittance parameters, the following calculations[iv] of interest may be performed. Alternatively, a transformation from Y to S parameters may be made and a similar set of calculations performed in the S-domain.

Voltage Gain	$A_V = -\dfrac{y_{2,1}}{y_{2,2}+Y_L}$
Current Gain	$A_I = \dfrac{y_{2,1}Y_L}{\Delta y + y_{1,1}Y_L}$ *where* $\Delta = y_{1,1}y_{2,2} - y_{1,2}\,y_{2,1}$
Input Admittance	$Y_{in} = y_{1,1} - \dfrac{y_{2,1}\,y_{1,2}}{y_{2,2}+Y_L}$
Output Admittance	$Y_{out} = y_{2,2} - \dfrac{y_{2,1}\,y_{1,2}}{y_{1,1}+Y_S}$
Stern K-Factor	$K = \dfrac{2\left(g_{1,1}+G_S\right)\left(g_{2,2}+G_L\right)}{\left\lvert y_{2,1}\,y_{1,2}\right\rvert + \mathrm{Re}\left(y_{2,1}\,y_{1,2}\right)}$

In the actual reduction formulation, the first process is to order the columns and rows to reflect the nodes desired for input, output, and reference, respectively, in order 1, 2, and 3. Then the reduction commences eliminating row/column N, followed by N-1, etc. until only a 3 × 3 YF matrix remains. Before each successive reduction, additional reordering among the rows/columns remaining to be suppressed should be done to minimize round-off errors, etc. The actual procedure suitable for this matrix reduction is shown in the Appendix.

Appendix

```
Void Reduce_Mat( int In_node, int Out_node, N int)

        Den     double;         // magnitude of yrr
        r       int;            // row and column being used
        i,j     int;
        LL      int;            // Largest diagonal element row
        XX1     double;         // real part of common term
        YY1     double;         // imaginary part of common term
        S1, S   double;         // tests for largest diagonal element

Void Swap( double x1, double x2)
        XX      double;

        begin
                XX = x1;        x1 = y1;        y1 = XX;
        end;


        begin
        If( In_node <> 1 ) or ( Out_node <> 2 ) then        // swap In and Out
          begin
                for j = 1 to N do
                        begin
                        Swap( y[1,j].r, y[In_node,j].r;
                        Swap( y[1,j].i, y[In_node,j].i;
                        Swap( y[2,j].r, y[Out_node,j].r;
                        Swap( y[2,j].i, y[Out_node,j].i;
                        end;
                for j = 1 to N do
                        begin
                        Swap( y[j,1].r, y[j, In_node].r;
                        Swap( y[j,1].i, y[j, In_node].i;
                        Swap( y[j,2].r, y[j, Out_node].r;
                        Swap( y[j,2].i, y[j, Out_node].i;
                        end;
          end;
 while N > 2 do
    begin
        LL = 3;
        S = abs(y[LL,LL].r) + abs(y[LL,LL].i);
        If N > 3 then
          begin
             for i = 4 to N do
                begin
                S1 = abs(y[I,I].r) + abs(y[I,I].i);
                If S1 > S then
                        Begin
                        S = S1;
                        LL = I;
                        end;
                end;
           end;
        if LL <> N then
                begin
```

```
                for j = 1 to N do
                        begin
                        Swap( y[LL,j].r, y[N,j].r);
                        Swap( y[LL,j].i, y[N,j].i);
                        end;
                For j = 1 to N do
                        begin
                        Swap( y[j,LL].r, y[j,N].r);
                        Swap( y[j,LL].i, y[j,N].i);
                        end;
                end;
Den = sqr(y[N,N].r) + sqr(y[N,N].i);
R = N;
N = N-1;
for i = 1 to N do
begin
        if(y[i,r].r <> 0) or (y[i,r].i <> 0 ) then
                begin
                XX1 = (y[I,r].r * y[r,r].r + y[r,r].i*y[I,r].i) / Den;
                YY1 = (y[r,r].r * y[I,r].i – y[I,r].r * y[r,r].i ) / Den;
                For j = 1 to N do
                        Begin
                        if(y[r,j].r <> 0) or (y[r,j].i <> 0 ) then
                                begin
                                y[i,j].r = y[i,j].r – y[r,j].r*XX1 + y[r,j].i*YY1;
                                y[I,j].i = y[I,j].i – y[r,j].r * YY1 – y[r,j].i * XX1;
                                end;
                        end;
                end;
        end;
end;
end;
end.
```

[i] "Unify Two-Port Calculations," Daruvala, D. J., Electronic Design, January 4, 1974, pp. 112-116
[ii] "Consider the Indefinite Matrix," Daruvala, D. J., Electronic Design, January 18, 1974, pp. 76-80
[iii] Computer Methods for Circuit Analysis and Design, Vlach, J., Singhal, K., Van Nostrand Reinhold, 1983
[iv] Solid State Radio Engineering, Krauss, H. L., Bostian, C.W., Raab, F. H., John Wiley & Sons, 1980